FERRIWO

# FWB048

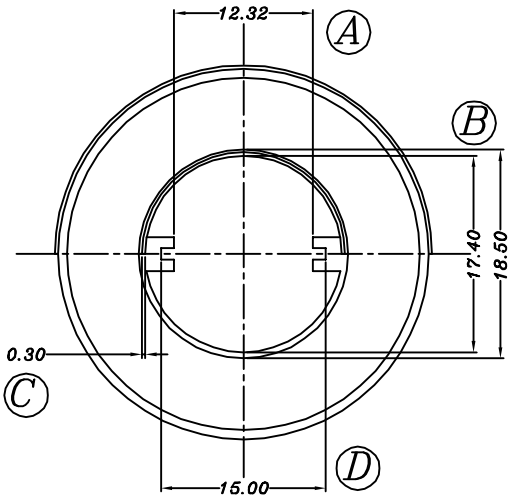


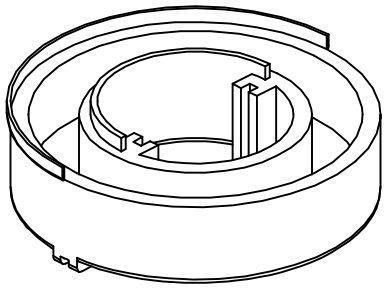

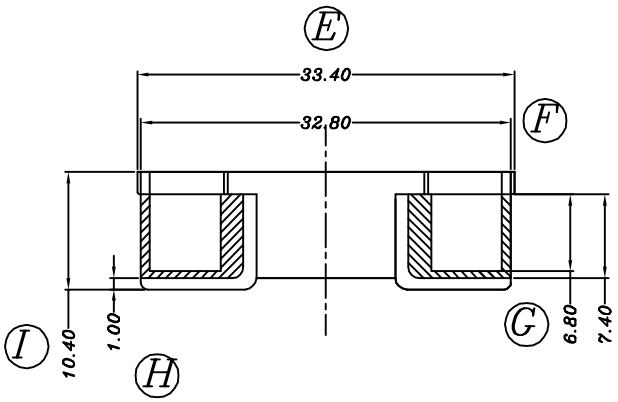


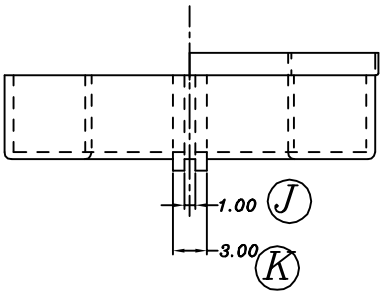


| REV | REVISION RECORD | DATE | REV | REVISION RECORD | DATE |
|---|---|---|---|---|---|
| A | | | C | | |
| B | | | D | | |

| NAME | 31*19*13 COVER | MATERIAL | PBT | SCALE | 1/1 | ANGLE | ±1° |
|---|---|---|---|---|---|---|---|
| DRAWING NO. | FWB048 | PIN MATERIAL | CP WIRE | UNIT | m/m | REV | A |
| TOLERANCE OF PIN PITCH ±0.20 | | | HAINING FERRIWO ELECTRONICS CO.,LTD. | | | | |
| PIN TENION LOAD kg MIN | | UL REC:94V-0 | TEL: +86-573-87088701 FAX: +86-573-87081130 | | | | |
| TOLERANCE:0<L≤4:±0.2 4<L≤16:±0.3 16<L≤63:±0.4 | | | Web: www.ferriwo.com Email: sales@ferriwo.com | | | | |